YOURITech
AN EUROTECH COMPANY

INDUSTRIAL STRENGTH...
Start Your Application From YOURITECH

Integration support
Obsolescence Management
Embedded Systems
PCAP
Human Machine Interface
Touch Solutions
Software
Production
Custom designs
Installation
Quality Management
Mechanical design
Open Frame Monitors
LCD Controller
Research & Development
Firmware
EMC tests
on-site service
In-house Manufacturing
Optical Bonding
Cover glass
System solutions
OEM Solutions
Custom Display

SPECIFICATION FOR LCM Module

MODULE No:	ET010FM01-K
CUSTOMER:	

YOURITECH	INITIAL	DATE
PREPARED BY		
CHECKED BY		
APPROVED BY		

CUSTOMER	INITIAL	DATE
APPROVED BY		

Revision History

Date	Rev. No.	Page	Summary
2019.11.09	V1.0	ALL	FIRST ISSUE

Contents

1. Block Diagram..... 5
2. Outline dimension..... 6
3. Input terminal Pin Assignment..... 7
4. LCD Optical Characteristics..... 8
4.1 Optical specification..... 8
5. Electrical Characteristics..... 11
5.1 Absolute Maximum Rating..... 11
5.2 DC Electrical Characteristics..... 11
5.3 LED Backlight Characteristics..... 12
6. AC Characteristics..... 14
6.1 Display Serial Interface Timing Characteristics (4-line SPI system)..... 144
6.2 Reset Timing Characteristics..... 155
7. LCD Module Out-Going Quality Level..... 16
7.1 VISUAL & FUNCTION INSPECTION STANDARD..... 16
7.1.1 Inspection conditions..... 16
7.1.2 Definition..... 16
7.1.3 Sampling Plan..... 17
7.1.4 Criteria (Visual)..... 18
8. Reliability Test Result..... 22
9. Cautions and Handling Precautions..... 23
9.1 Handling and Operating the Module..... 23
9.2 Storage and Transportation..... 24
9.3 Designing Precautions..... 24

* Description

This is a color active matrix TFT (Thin Film Transistor) LCD (liquid crystal display) that uses amorphous silicon TFT as a switching device. This module is composed of a Transmissive type TFT-LCD Panel, driver circuit,back-light unit. The resolution of a 0.96 " TFT-LCD contains 80x160 pixels, and can display up to 262K colors.

* Features

General Information Items	Specification	Unit	Note
	Main Panel		
Display area(AA)	10.8(H) x 21.7(V) （0.96 inch）	mm	
Driver element	TFT active matrix	-	
Display colors	262K	colors	
Number of pixels	80(H)RGB x 160(V)	dots	
Pixel arrangement	RGB vertical stripe	-	
Pixel pitch	0.135(H) x 0.1356(V) mm	mm	
Viewing angle	All View	o'clock	
Controller IC	ST7735S	-	
LCM Interface	4 Line SPI	-	
Display mode	Normally black	-	
Operating temperature	-20～+70	℃	
Storage temperature	-30～+80	℃	

* Mechanical Information

Item		Min.	Typ.	Max.	Unit	Note
Module size	Horizontal(H)	-	13.5	-	mm	
	Vertical(V)	-	27.95	-	mm	
	Depth(D)	-	-	1.5	mm	
Weight		-	1.1	-	g	

1. Block Diagram

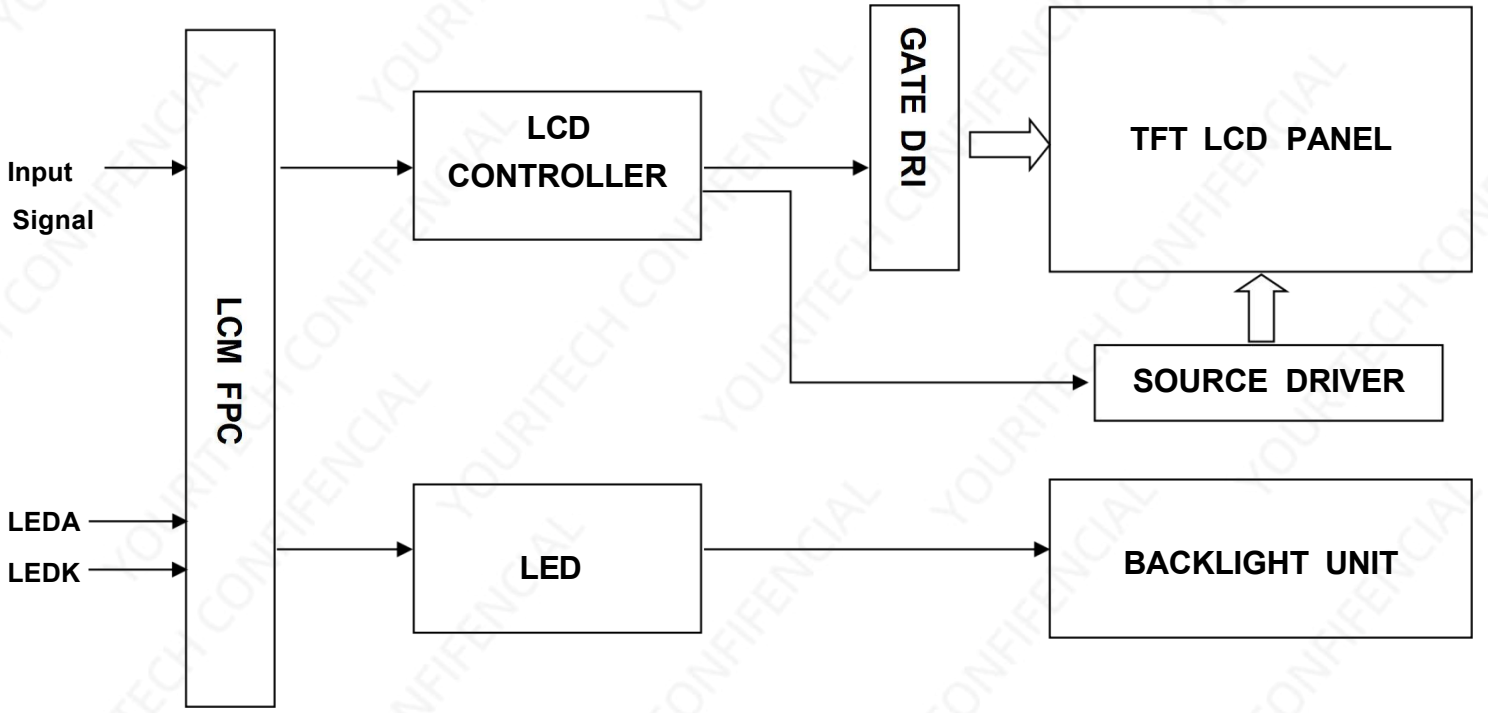

2. Outline dimension

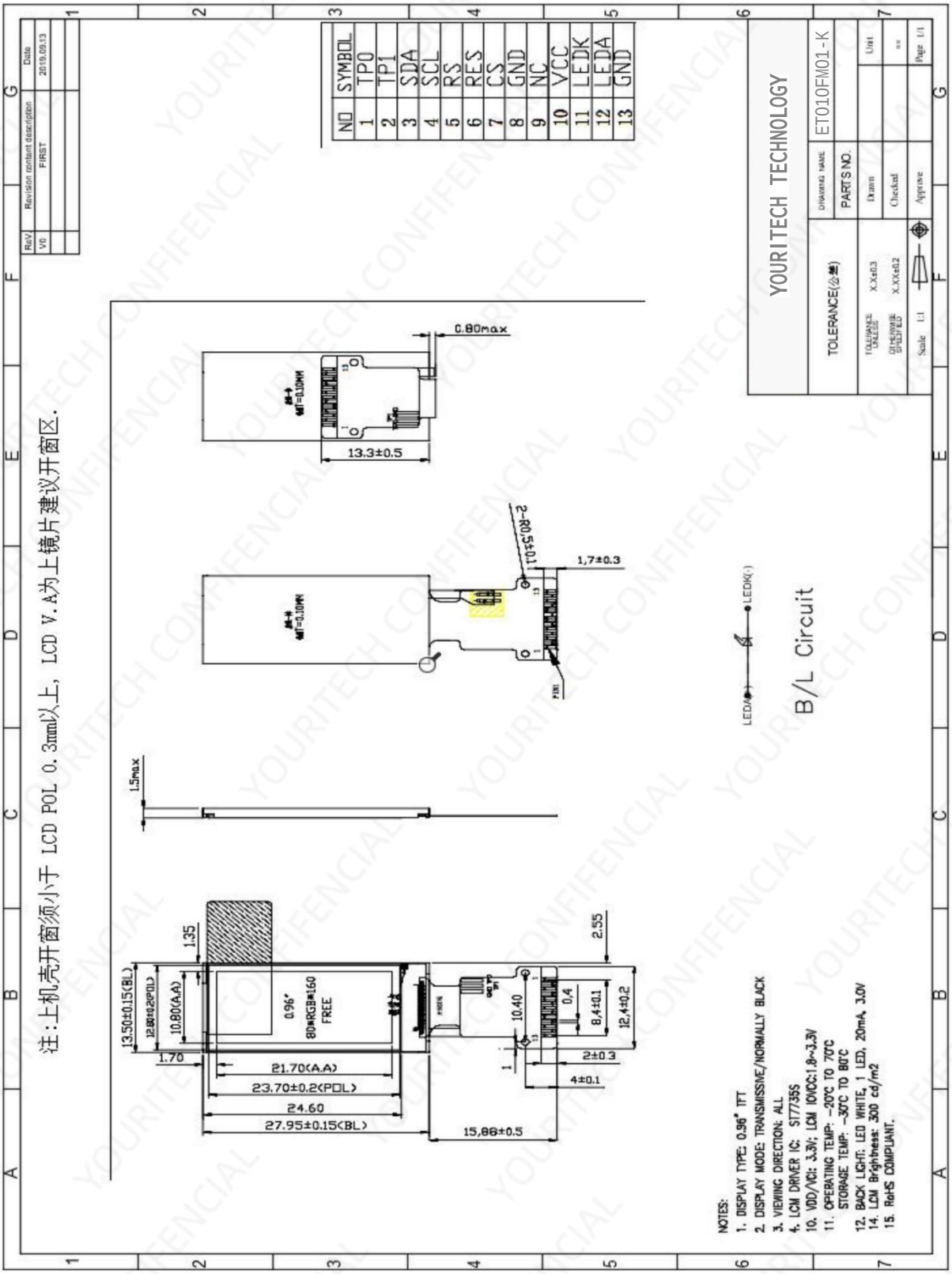

3. Input terminal Pin Assignment

NO.	SYMBOL	DISCRIPTION	I/O
1	TPO	Touch Pin,If not used,please open this pin.	P
2	TP1	Touch Pin,If not used,please open this pin.	P
3	SDA	SPI interface input/outpur pin.	I
4	SCL	This pin is used to be serial interface clock.	I
5	RS	Display data/command selection pin in 4-line serial interface.	I
6	RESET	This signal will reset the device,Signal is active low.	I
7	CS	Chip selection pin,Low enable,High disable.	I
8	GND	Power Ground.	P
9	NC	No Connect.	
10	VDD	Power Supply for Analog	I
11	LEDK	LED Canthode	P
12	LEDA	LED Anode	P
13	GND	Power Ground.	P

Note:

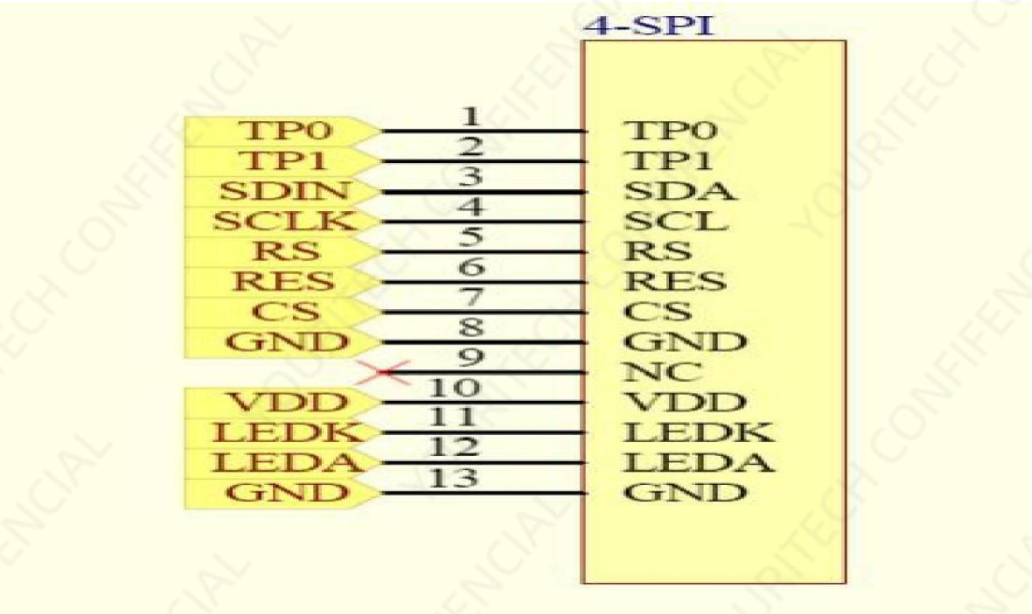

4. LCD Optical Characteristics

4.1 Optical specification

Item		Symbol	Condition	Min.	Typ.	Max.	Unit.	Note
Contrast Ratio		CR	Θ=0 Normal viewing angle	450	600	--		(1)(2)
Response time	Rising	$T_{R+}T_F$		--	30	40	msec	
	Falling							(1)(3)
Color Gamut		S(%)		--	46.96	--	%	
Color Filter Chromacicity	White	W_X		0.283	0.291	0.296		CA-310
		W_Y		0.297	0.302	0.306		
	Red	R_X		0.573	0.579	0.583		
		R_Y		0.354	0.357	0.362		
	Green	G_X		0.305	0.315	0.320		
		G_Y		0.541	0.544	0.5548		
	Blue	B_X		0.152	0.157	0.163		
		B_Y		0.087	0.092	0.097		
Viewing angle	Hor.	ΘL	CR>10	--	80	--		(1)(4)
		ΘR		--	80	--		
	Ver.	ΘU		--	80	--		
		ΘD		--	80	--		
Option View Direction		Free						

NOte1:Definition of Response Time.(white-black)

The response time is sefined as the time interval between the 10%and 90%amplitudes

Measuring Condition

Measuring surrounding : dark room

Ambient temperature : 25° C±2° C

15min. warm-up time.

Measuring Equipment

FPM520 , which utilized SR-3 for Chromaticity and BM-5A for other optical characteristics.

Note (1): Definition of Viewing Angle：

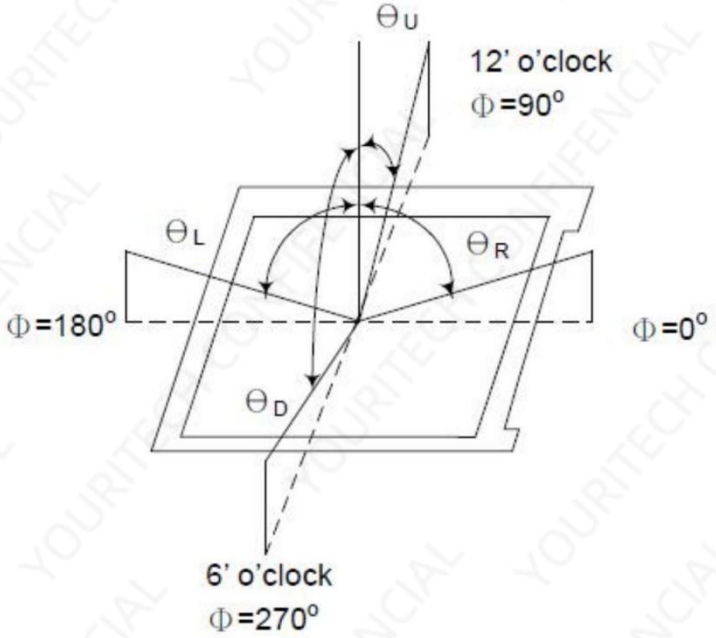

Note (2): Definition of Contrast Ratio(CR) :measured at the center point of panel

$$CR = \frac{\text{Luminance with all pixels white}}{\text{Luminance with all pixels black}}$$

Note (3): Response Time

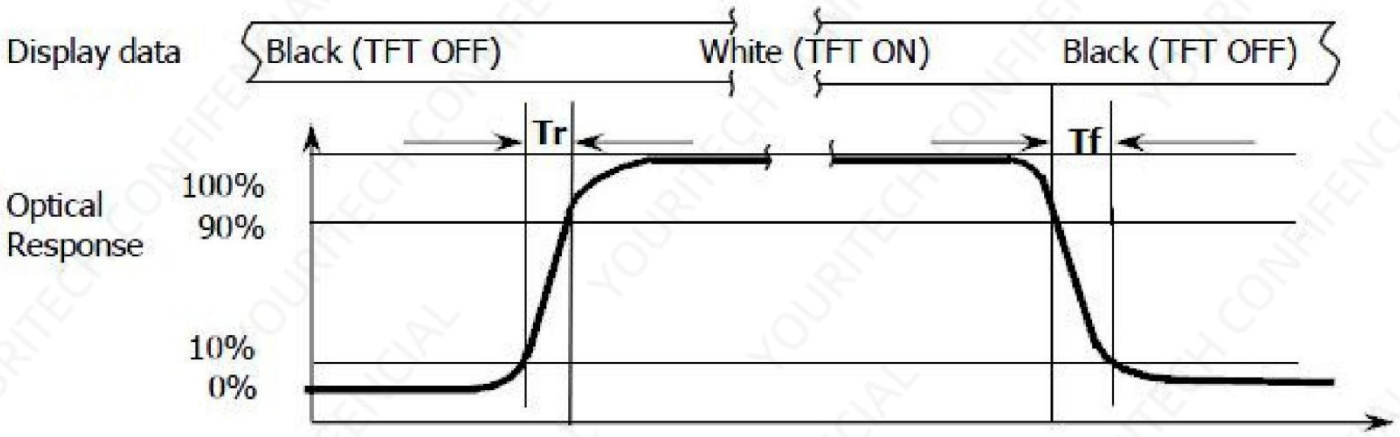

Note (4): Definition of optical measurement setup

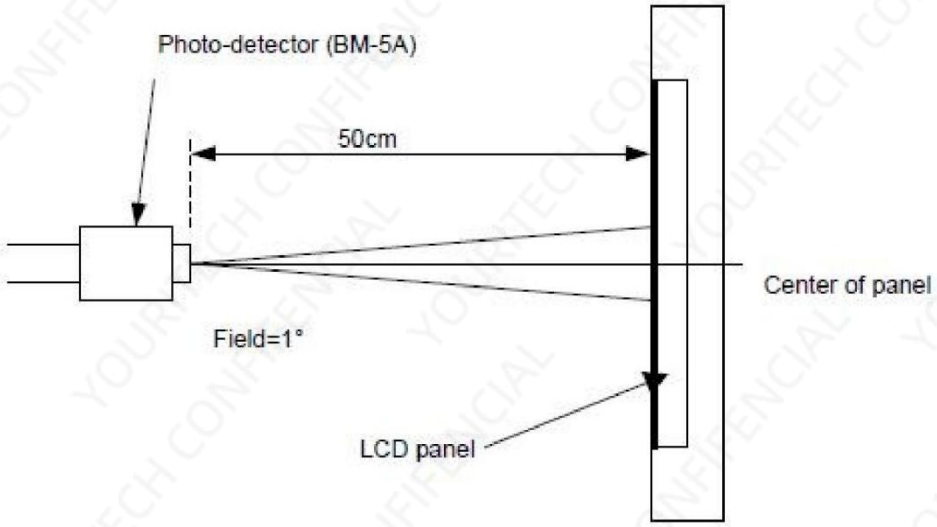

5. Electrical Characteristics

5.1 Absolute Maximum Rating

Characteristics	Symbol	Min.	Max.	Unit	Note
Digital Supply Voltage	VDD	-0.3	4.6	V	Note1
Digital interface supple	VDDIO	-0.3	4.6	V	Note1
Operating temperature	T_{OP}	-20	+70	℃	
Storage temperature	T_{ST}	-30	+80	℃	

NOTE1: If the absolute maximum rating of even is one of the above parameters is exceeded even momentarily, the quality of the product may be degraded. Absolute maximum ratings, therefore, specify the values exceeding which the product may be physically damaged. Be sure to use the product within the range of the absolute maximum ratings.

5.2 DC Electrical Characteristics

Characteristics	Symbol	Min.	Typ.	Max.	Unit	Note
Digital Supply Voltage	VCI	2.5	2.8	3.3	V	
Digital interface supple Voltage	IOVCC	1.65	1.8	3.3	V	
Normal mode Current	IDD	--	2	4	mA	
Level input voltage	V_{IH}	0.7*IOVCC	--	IOVCC+0.3	V	
	V_{IL}	GND-0.3	--	0.3*IOVCC	V	
Level output voltage	V_{OH}	IOVCC-0.4	--	--	V	
	V_{OL}	GND	--	GND+0.4	V	

5.3 LED Backlight Characteristics

The back-light system is edge-lighting type with 1 chips LED

Item	Symbol	Min.	Typ.	Max.	Unit	Note
Forward Current	I_F	15	20	--	mA	
Forward Voltage	V_F	--	3.2	--	V	
LCM Luminance	LV	--	500	--	cd/m2	Note3
LED life time	Hr	--	50000	--	Hour	Note1,2
Uniformity	Avg	80	--	--	%	Note3

Note1: LED life time (Hr) can be defined as the time in which it continues to operate under the condition: Ta=25±3 ℃, typical IL value indicated in the above table until the brightness becomes less than 50%.

Note 2: The "LED life time" is defined as the module brightness decrease to 50% original brightness at Ta=25℃ and IL=20mA. The LED lifetime could be decreased if operating IL is larger than 20mA. The constant current driving method is suggested.

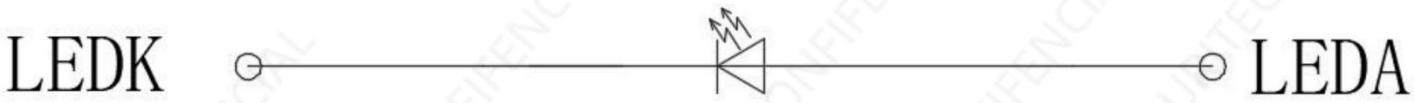

LED CIRCUIT DIAGRAM

Note (3) Luminance Uniformity of these 9 points is defined as below:

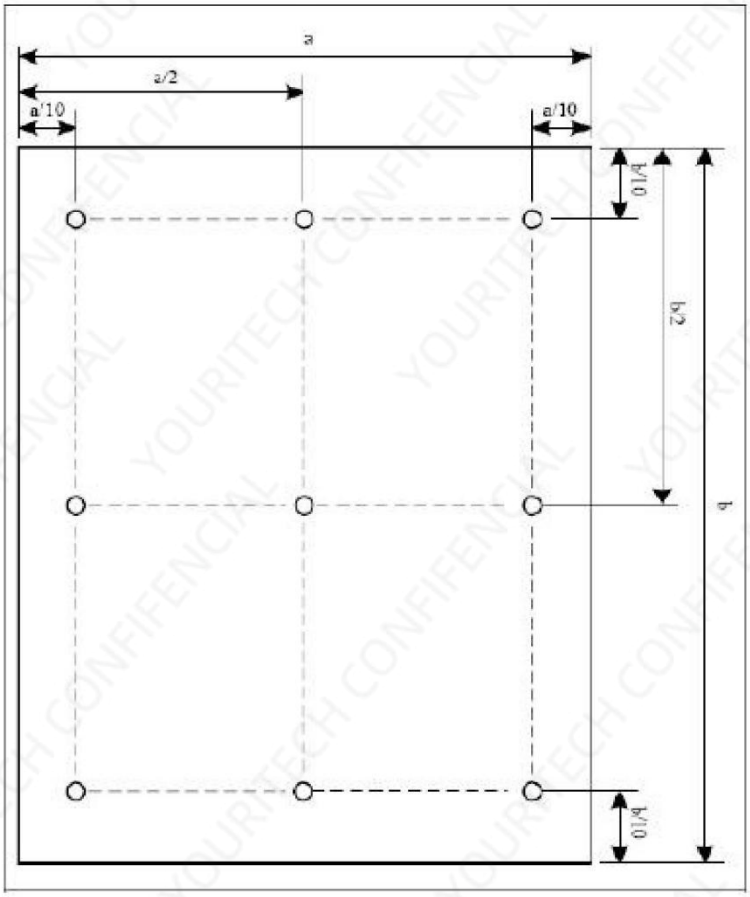

$$\text{Uniformity} = \frac{\text{minimum luminance in 9 points (1-9)}}{\text{maximum luminance in 9 points (1-9)}}$$

$$\text{Luminance} = \frac{\text{Total Luminance of 9 points}}{9}$$

6. AC Characteristics

6.1 Display Serial Interface Timing Characteristics (4-line SPI system)

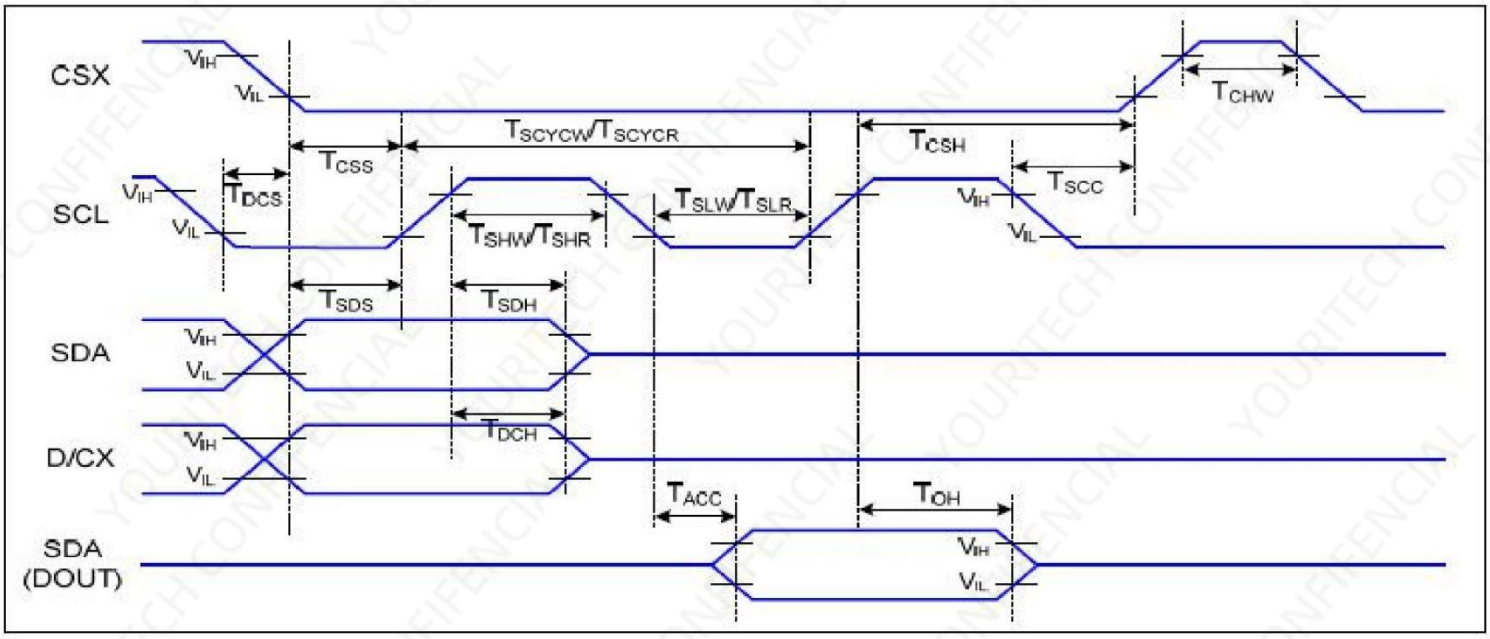

Ta=25 ℃, VDDI=1.65~3.7V, VDD=2.5~4.8V

Signal	Symbol	Parameter	MIN	MAX	Unit	Description
CSX	TCSS	Chip Select Setup Time (Write)	45		ns	
	TCSH	Chip Select Hold Time (Write)	45		ns	
	TCSS	Chip Select Setup Time (Read)	60		ns	
	TSCC	Chip Select Hold Time (Read)	65		ns	
	TCHW	Chip Select "H" Pulse Width	40		ns	
SCL	TSCYCW	Serial Clock Cycle (Write)	66		ns	-Write Command & Data Ram
	TSHW	SCL "H" Pulse Width (Write)	15		ns	
	TSLW	SCL "L" Pulse Width (Write)	15		ns	
	TSCYCR	Serial Clock Cycle (Read)	150		ns	-Read Command & Data Ram
	TSHR	SCL "H" Pulse Width (Read)	60		ns	
	TSLR	SCL "L" Pulse Width (Read)	60		ns	
D/CX	TDCS	D/CX Setup Time	10		ns	
	TDCH	D/CX Hold Time	10		ns	
SDA (DIN) (DOUT)	TSDS	Data Setup Time	10		ns	For Maximum CL=30pF For Minimum CL=8pF
	TSDH	Data Hold Time	10		ns	
	TACC	Access Time	10	50	ns	
	TOH	Output Disable Time	15	50	ns	

6.2 Reset Timing Characteristics

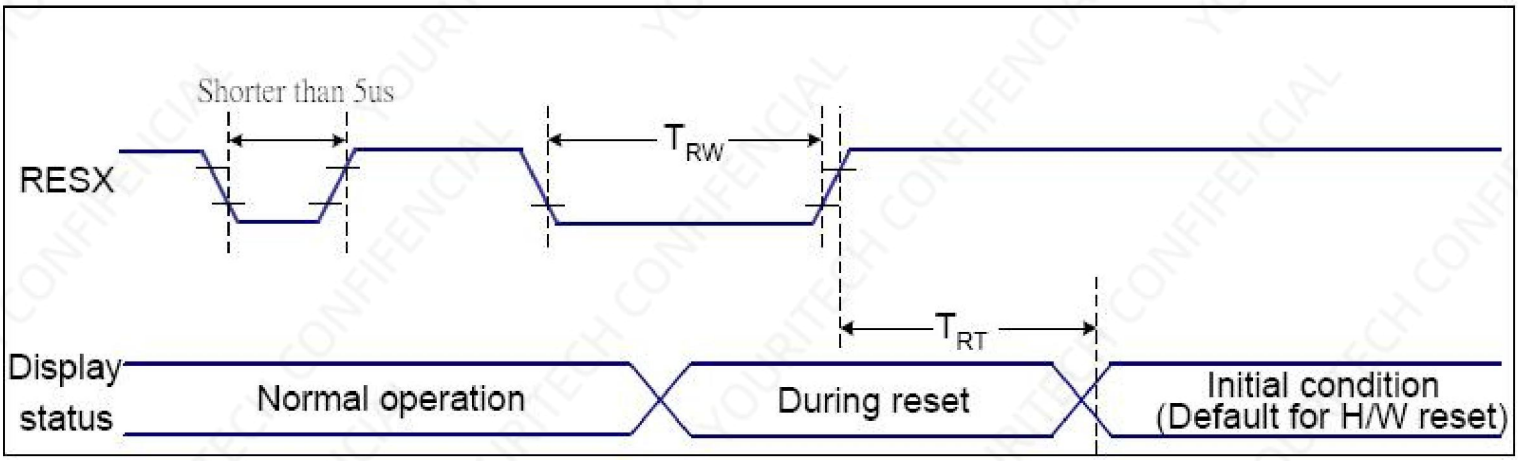

VDDI=1.65 to 3.3V, VDD=2.4 to 3.3V, AGND=DGND=0V, Ta=-30 ~ 70 ℃

Related Pins	Symbol	Parameter	MIN	MAX	Unit
RESX	TRW	Reset pulse duration	10	-	us
	TRT	Reset cancel	-	5 (Note 1, 5)	ms
				120 (Note 1, 6, 7)	ms

Notes:

1. The reset cancel includes also required time for loading ID bytes, VCOM setting and other settings from NVM (or similar device) to registers. This loading is done every time when there is HW reset cancel time (tRT) within 5 ms after a rising edge of RESX.

2. Spike due to an electrostatic discharge on RESX line does not cause irregular system reset according to the table below:

RESX Pulse	Action
Shorter than 5us	Reset Rejected
Longer than 9us	Reset
Between 5us and 9us	Reset starts

3. During the Resetting period, the display will be blanked (The display is entering blanking sequence, which maximum time is 120 ms, when Reset Starts in Sleep Out –mode. The display remains the blank state in Sleep In –mode.) and then return to Default condition for Hardware Reset.

4. Spike Rejection also applies during a valid reset pulse as shown below:

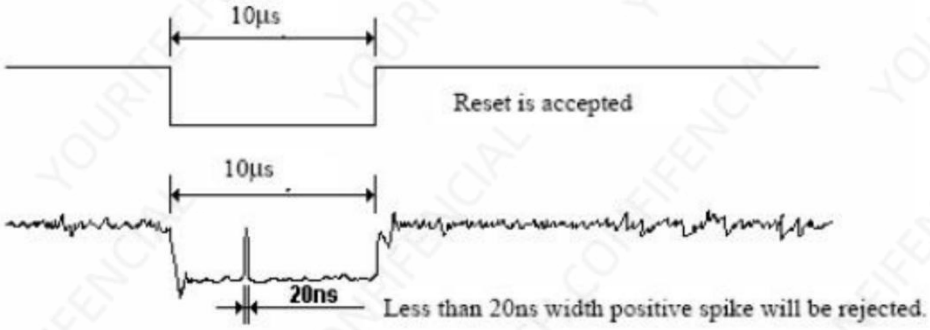

5. When Reset applied during Sleep In Mode.

6. When Reset applied during Sleep Out Mode.

7. It is necessary to wait 5msec after releasing RESX before sending commands. Also Sleep Out command cannot be sent for 120msec.

7. LCD Module Out-Going Quality Level

7.1 VISUAL & FUNCTION INSPECTION STANDARD

7.1.1 Inspection conditions

Inspection performed under the following conditions is recommended.

Temperature : 25±5℃

Humidity : 65%±10%RH

Viewing Angle : Normal viewing Angle.

Illumination: Single fluorescent lamp (300 to 700Lux)

Viewing distance:30-50cm

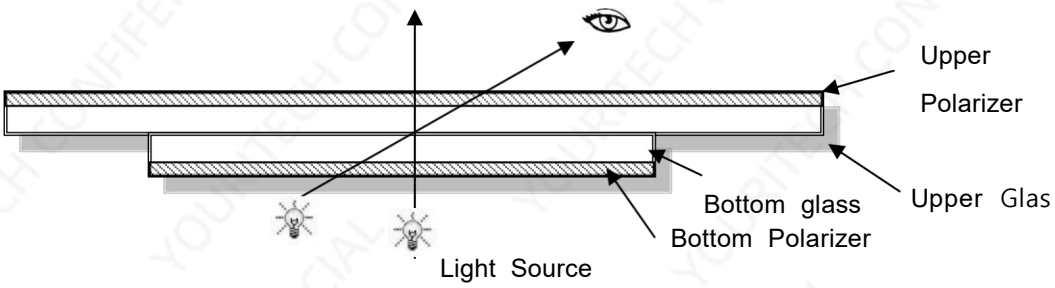

7.1.2 Definition

Zone D

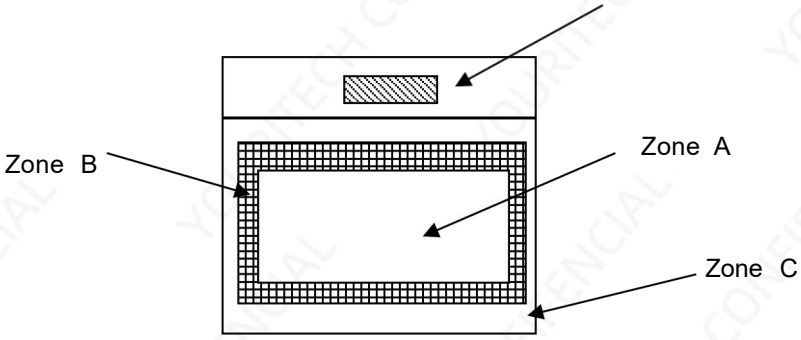

Zone A : Effective Viewing Area(Character or Digit can be seen)

Zone B : Viewing Area except Zone A

Zone C : Outside (Zone A+Zone B) which can not be seen after assembly by customer .)

Zone D : IC Bonding Area

Note:As a general rule ,visual defects in Zone C can be ignored when it doesn't effect product function or appearance after assembly by customer

7.1.3 Sampling Plan

According to GB/T 2828.1-2003 ; , normal inspection, Class Ⅱ

AQL:

Major defect	Minor defect
0.65	1.5

LCD: Liquid Crystal Display , TP: Touch Panel , LCM: Liquid Crystal Module

No	Items to be inspected	Criteria	Classification of defects
1	Functional defects	1) No display, Open or miss line 2) Display abnormally, Short 3) Backlight no lighting, abnormal lighting. 4) TP no function	Major
2	Missing	Missing component	
3	Outline dimension	Overall outline dimension beyond the drawing is not allowed	
4	Color tone	Color unevenness, refer to limited sample	Minor

5	Spot Line defect	Light dot，Dim spot,Polarizer Bubble ; Polarizer accidented spot.	
6	Soldering appearance	Good soldering , Peeling off is not allowed.	
7	LCD/Polarizer	Black/White spot/line, scratch, crack, etc.	

7.1.4 Criteria (Visual)

<table>
<tr><th>Number</th><th>Items</th><th>Criteria(mm)</th></tr>
<tr><td rowspan="2">1.0 LCD Crack/Broken
NOTE:
X: Length
Y: Width
Z: Height
L: Length of IT O,
T: Height of LCD</td><td>(1) The edge of LCD broken</td><td> 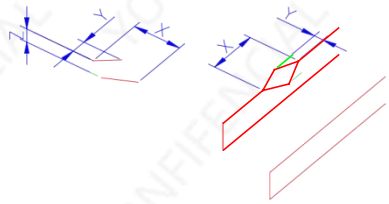

<table>
<tr><th>X</th><th>Y</th><th>Z</th></tr>
<tr><td>≤3.0mm</td><td><Inner border line of the seal</td><td>≤T</td></tr>
</table></td></tr>
<tr><td>(2)LCD corner broken</td><td> 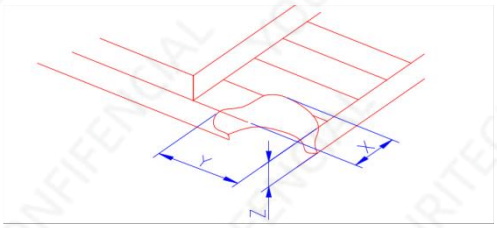

<table>
<tr><th>X</th><th>Y</th><th>Z</th></tr>
<tr><td>≤3.0mm</td><td>≤L</td><td>≤T</td></tr>
</table></td></tr>
</table>

	(3) LCD crack	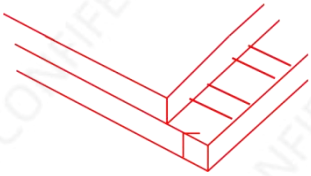 Crack Not allowed

2.0

Spot defect

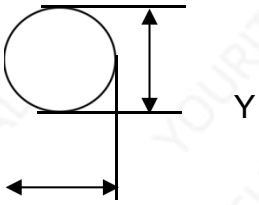

Φ=(X+Y)/2

① light dot (LCD/TP/Polarizer black/white spot , light dot, pinhole, dent, stain)

Size (mm) \ Zone	Acceptable Qty		
	A	B	C
Φ≤0.10	Ignore		Ignore
0.10<Φ≤0.20	3(distance≧10mm)		
0.20<Φ≤0.25	2		
Φ>0.3	0		

②Dim spot (LCD/TP/Polarizer dim dot, light leakage、dark spot)

Size (mm) \ Zone	Acceptable Qty		
	A	B	C
Φ≤0.1	Ignore		Ignore
0.10<Φ≤0.20	3(distance≧10mm)		
0.20<Φ≤0.25	2		
Φ>0.3	0		

③ Polarizer accidented spot

Size (mm) \ Zone	Acceptable Qty		
	A	B	C
Φ≤0.2	Ignore		Ignore
0.3<Φ≤0.5	2(distance≧10mm)		
Φ>0.5	0		

④Pixel bad points (light dot，Dim dot, color dot）

Size (mm) \ Zone	Acceptable Qty		
	A	B	C
Φ≤0.1	Ignore		Ignore
0.15<Φ≤0.2	2(distance≧10mm)		
Φ>0.2	0		

⑤ Polarizer Bubble

Size (mm) \ Zone	Acceptable Qty		
	A	B	C

<table>
<tr><td>3.0</td><td>Line defect (LCD /Polarizer backlight black/white line, scratch, stain)</td><td>
<table>
<tr><td rowspan="2">Width(mm)</td><td rowspan="2">Length(mm)</td><td colspan="3">Acceptable Qty</td></tr>
<tr><td>A</td><td>B</td><td>C</td></tr>
<tr><td>Φ≤0.03</td><td>Ignore</td><td colspan="2">Ignore</td><td rowspan="3">Ignore</td></tr>
<tr><td>0.03<W≤0.04</td><td>L≤3.0</td><td colspan="2">N≤2</td></tr>
<tr><td>0.04<W≤0.05</td><td>L≤2.0</td><td colspan="2">N≤1</td></tr>
<tr><td>0.05<W</td><td colspan="4">Define as spot defect</td></tr>
</table>
</td></tr>
<tr><td>4.0</td><td>Electronic Components SMT</td><td>Not allow missing parts，solderless connection，cold solder joint，mis match，The positive and negative polarity opposite</td></tr>
<tr><td>5.0</td><td>Display color& Brightness</td><td>1. Color：Measuring the color coordinates, The measurement standard according to the datasheet or samples.
2. Brightness：Measuring the brightness of White screen, The measurement standard according to the datasheet or Samples.</td></tr>
<tr><td>6.0</td><td>LCD Mura</td><td>By 5% ND filter invisible.</td></tr>
</table>

Criteria (functional items)

Number	Items	Criteria (mm)
1	No display	Not allowed
2	Missing segment	Not allowed
3	Short	Not allowed
4	Backlight no lighting	Not allowed

8. Reliability Test Result

Item	Condition	Inspection after test
High Temperature Operating	70℃,120H	Inspection after 2~4hours storage at room temperature, the sample shall be free from defects: 1.Air bubble in the LCD; 2.Non-display; 3.Missing segments/line; 4.Glass crack; 5.Current IDD is twice higher than initial value.
Low Temperature Operating	-20℃, 120HR	
High Temperature Storage	80℃, 120HR	
Low Temperature Storage	-30℃, 120HR	
High Temperature & High Humidity Operating	+50℃, 85% RH ,120 hours.	
Thermal Shock (Non-operation)	-10℃,30 min ↔ +60℃,60 min, Change time:5min 20CYC.	
ESD test	C= 150pF, R=330,5points/panel Air:±4KV, 5times; Contact:±2KV, 5 times; (Environment: 15℃~35℃, 30%~60%).	
Vibration (Non-operation)	Frequency range:10~50Hz, Stroke:1.5mm Sweep:10Hz~50Hz~ 10Hz 2 hours for each direction of X.Y.Z. (6 hours for total) (Package condition).	
Box Drop Test	1 Corner 3 Edges 6 faces,80㎝ (MEDIUM BOX)	

Remark:

1.The test samples should be applied to only one test item.

2.Sample size for each test item is 5~10pcs.

3.For Damp Proof Test, Pure water(Resistance > 10MΩ) should be used.

4.In case of malfunction defect caused by ESD damage, if it would be recovered to normal state after resetting, it would be judged as a good part.

5.Failure Judgment Criterion: Basic Specification, Electrical Characteristic, Mechanical Characteristic, Optical Characteristic.

9. Cautions and Handling Precautions

9.1 Handling precautions

1) Since the display panel is being made of glass, do not apply mechanical impacts such us dropping from a high position.

2) If the display panel is broken by some accident and the internal organic substance leaks out, be careful not to inhale nor lick the organic substance.

3) If pressure is applied to the display surface or its neighborhood of the TFT display module, the cell structure may be damaged and be careful not to apply pressure to these sections.

4) The polarizer covering the surface of the TFT display module is soft and easily scratched. Please be careful when handling the TFT display module.such as ethyl alcohol, since the surface of the polarizer will become cloudy. Also, pay attention that the following liquid and solvent may spoil the polarizer:

* Water
* Ketone
* Aromatic Solvents

6) Hold TFT display module very carefully when placing TFT display module into the system housing. Do not apply excessive stress or pressure to TFT display module. And, do not over bend the film with electrode pattern layouts. These stresses will influence the display performance. Also, secure sufficient rigidity for the outer cases.

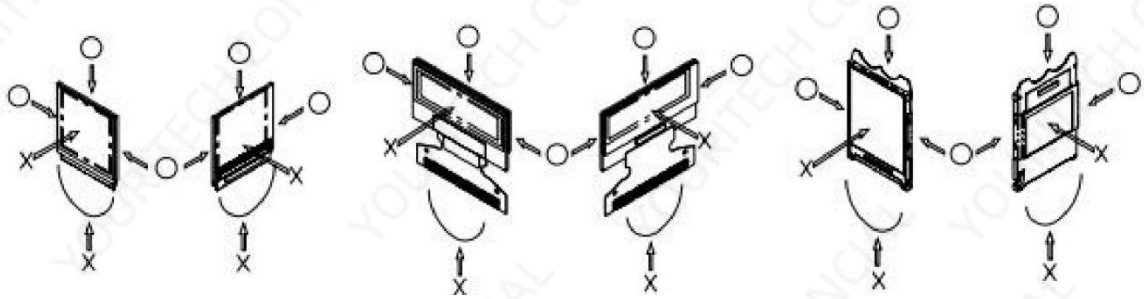

7) Do not apply stress to the driver IC and the surrounding molded sections.

8) Do not disassemble nor modify the TFT display module.

9) Do not apply input signals while the logic power is off.

* Be sure to ground tools to use or assembly such as soldering irons.
* To suppress generation of static electricity, avoid carrying out assembly work under dry environments.
* Protective film is being applied to the surface of the display panel of the TFT display module. Be careful since static electricity may be generated when exfoliating the protective film.

11) Protection film is being applied to the surface of the display panel and removes the protection filmbefore assembling it. At this time, if the TFT display module has been stored for a long period of time, residue adhesive material of the protection film may remain on the surface of the display panel after removed of the film. In such case, remove the residue material by the method introduced in the above Section 5).

12) If electric current is applied when the TFT display module is being dewed or when it is placed under high humidity

environments, the electrodes may be corroded and be careful to avoid the above.

9.2 Storage Precautions

1) When storing TFT display modules, put them in static electricity preventive bags avoiding exposure to direct sun light nor to lights of fluorescent lamps. and, also, avoiding high temperature and high humidity environment or low temperature (less than 0°C) environments. (We recommend you to store these modules in the packaged state when they were shipped from Limito Technology Inc.)At that time, be careful not to let water drops adhere to the packages or bags nor let dewing occur with them.

2) If electric current is applied when water drops are adhering to the surface of the TFT display module, when the TFT display module is being dewed or when it is placed under high humidity environments, the electrodes may be corroded and be careful about the above.

9.3 Designing Precautions

1) The absolute maximum ratings are the ratings which cannot be exceeded for TFT display module, and if these values are exceeded, panel damage may be happen.

2) To prevent occurrence of malfunctioning by noise, pay attention to satisfy the VIL and VIH specifications and, at the same time, to make the signal line cable as short as possible.

3) We recommend you to install excess current preventive unit (fuses, etc.) to the power circuit (VDD). (Recommend value: 0.5A)

4) Pay sufficient attention to avoid occurrence of mutual noise interference with the neighboring devices.

5) As for EMI, take necessary measures on the equipment side basically.

6) When fastening the TFT display module, fasten the external plastic housing section.

7) If power supply to the TFT display module is forcibly shut down by such errors as taking out the main battery while the TFT display panel is in operation, we cannot guarantee the quality of this OEL display module.

8) The electric potential to be connected to the rear face of the IC chip should be as follows:

* Connection (contact) to any other potential than the above may lead to rupture of the IC.