YOURITech
AN EUROTECH COMPANY

INDUSTRIAL STRENGTH...
Start Your Application From YOURITECH

Integration support
Obsolescence Management
Embedded Systems
PCAP
Human Machine Interface
Touch Solutions
Software
Production
Custom designs
Installation
Quality Management
Mechanical design
Open Frame Monitors
LCD Controller
Research & Development
Firmware
EMC tests
on-site service
In-house Manufacturing
Optical Bonding
Cover glass
System solutions
OEM Solutions

Eurotech YOURITech AN EUROTECH COMPANY AOSHiTE 奥舰特 Your Reliable Display Panel and Smart Touch Embedded Solution Partner

For more information about comprehensive display panels and touch embedded solutions, welcome contact us at:

https://www.youritech.com
info@youritech.com

SHARP

Areas where glass thickness will be changed
(Within the following three frames)

CONFIDENTIAL

TENTATIVE

The drawings above are tentative as the some parts are currently being under review, which may be changed in future.

出図 ISSUE

設計通報 DRAWING INFO. 連絡書 INFORMATION

No.( )号による

新設 NEW — 変更 CHANGE — 書換 REPLACE 図面

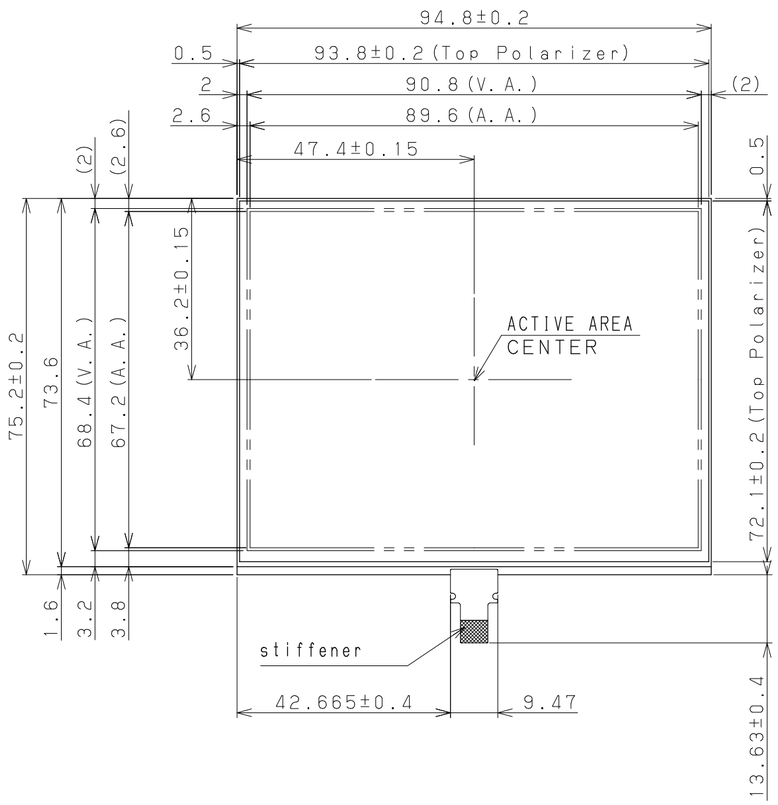

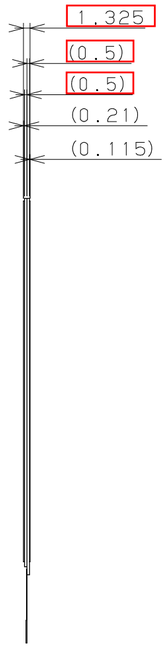

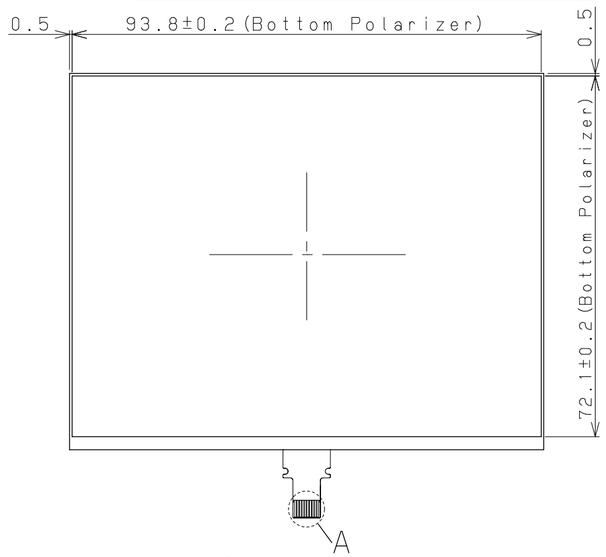

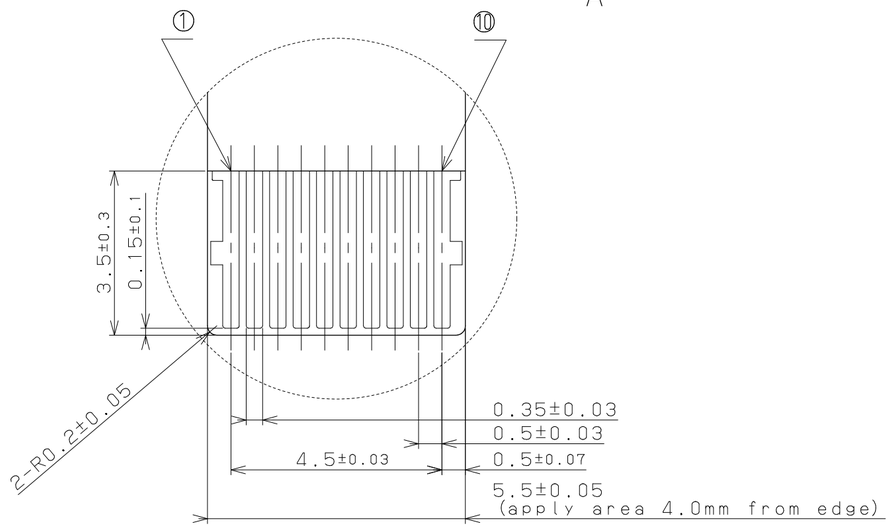

Detail A

Unit:mm
指示なき寸法公差は±0.2
UNSPECIFIED TOL TO BE ±0.2

Any foreign materials and contamination outside the Active area are to be treated as "NO-Count" at our inspections.
Guarantee of appearance=LCD Active area.
General tolerance is ±0.2.
FPC bend larger than 0.45 in radius.
Please design carefully to hide the polarizer and other frame areas, which are outside of the guaranteed area. As the light from backlight may leak from the gap at outside of Active area, which are outside of Active area, please pay attentions to such leakage when designing the set.
The tolerances of the module width do not include warp of the glass.

3			
2			
1			
	年月日 DATE	改定記事 REVISE	担当 REVISOR

名称 NAME: Outline Dimension

材質 MATERIAL	板厚 THICKNESS	仕上 FINISH	尺度 SCALE
			1/1

適用機種 MODEL: LS044Q7DH01

部品コード PARTS CODE:

無錫夏普顯示科技有限公司	検図 CHECK	承認 APPROVE	SHARP CORPORATION
開発本部 第六開発部			シャープ株式会社 DP事業本部
設計 DESIGN: LU XIN	検図 CHECK	検図 CHECK	発行部門 WSDT 設計中心

作成日付 DATE: 2024・05・27

図番 DRAWING No.: SCDM20240028A